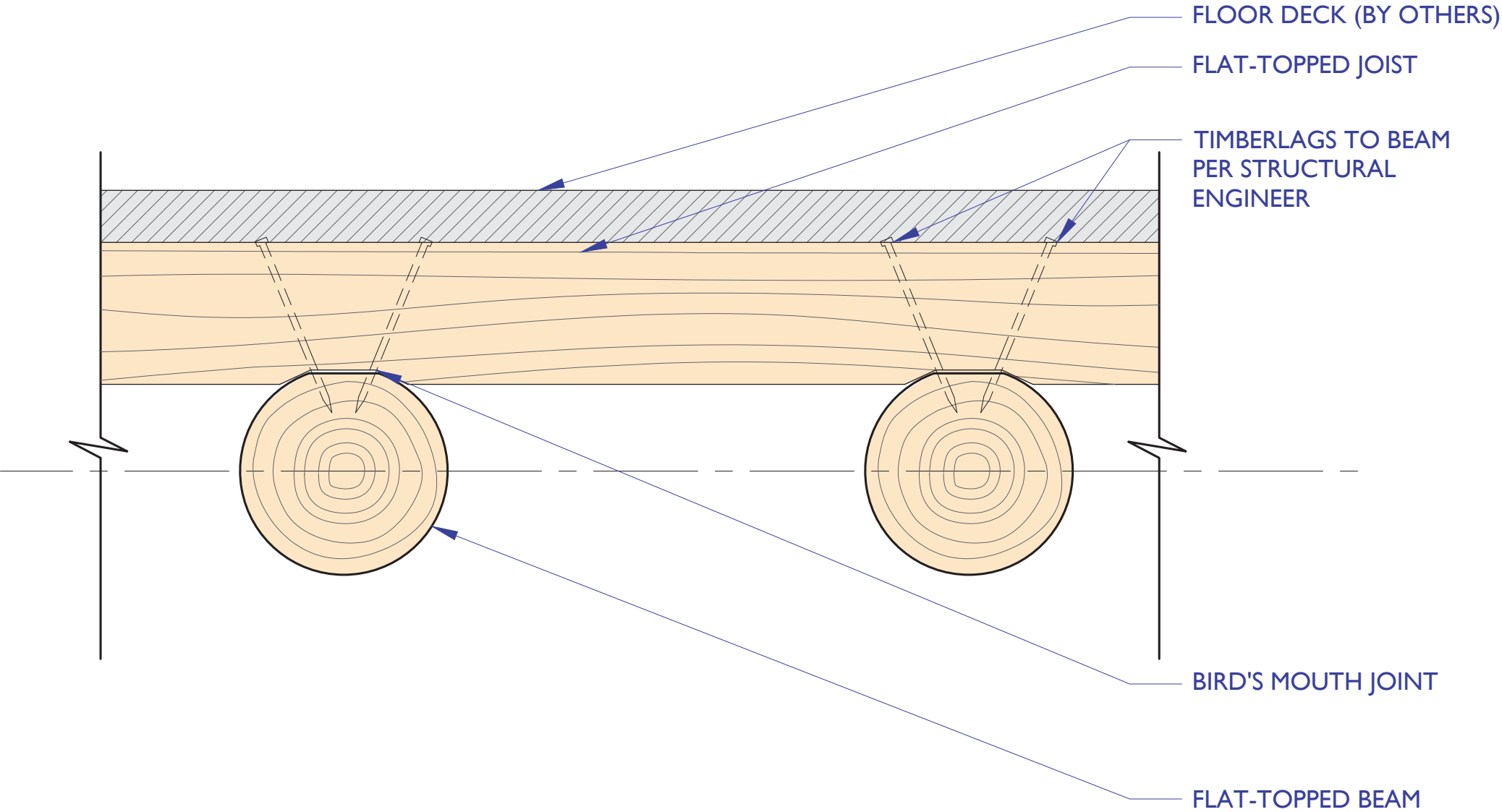

WHOLETREES®

S07

Beam to Floor Joist Connection

SCALE: 1 1/2" =1'

© WholeTrees LLC 2016

INCHES 0 3 6 12 24

STRUCTURES